SCHNEPEL
Macht mein Möbel

X-Linie X-Hifi-Rack XL

STANDARD **FEATURES**

- Side parts and shelves can be freely combined out of 11 decors
- High loading capacity
- Cable passages in the rear panel (1 per compartment)
- 4 compartments for placing AV devices
- Shelves height adjustable in 32 mm steps
- The depth and width of each compartment is 500 mm

TECHNICAL DATA

Measurements

Width	820 mm
Height (incl. feet)	1010 mm
Depth	545 mm
Depth & width of compartment	500 mm

Loading capacity

Top shelf	40 kg
Shelves	40 kg
Cable passages	1 per compartment

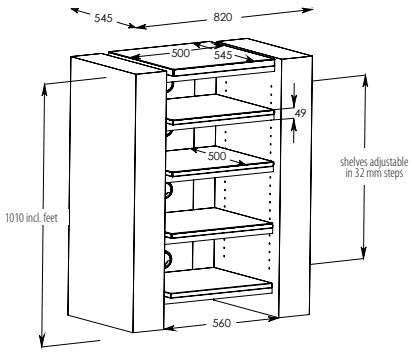

DECORS

LOGISTIC INFOS

Packaging measurements in mm
L 1110 x W 645 x H 920
Weight 48,6 kg

Misprint & technical changes reserved!

SCHNEPEL GMBH & CO. KG
ELLERKAMPSTR. 79 | 32609 HÜLLHORST | GERMANY
FON 00 49 57 41.34 61-0 | FAX 00 49 57 41.91 18
INFO@SCHNEPEL.COM | WWW.SCHNEPEL.COM